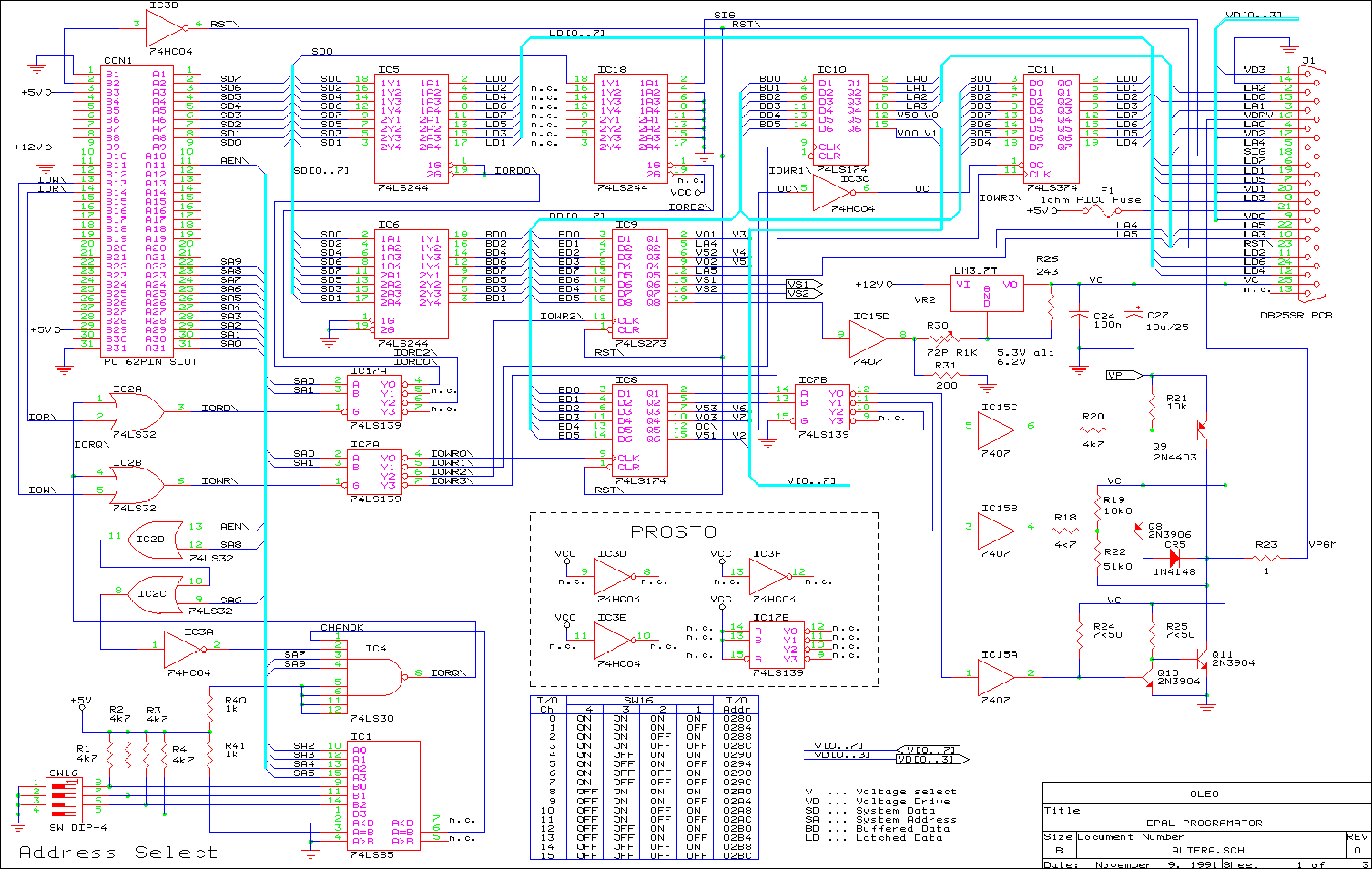
IC3B
74HC04
RST\
CON1
PC 62PIN SLOT
+5V
+12V
IOW\
IOR\
AEN\
SD0
SD[0..7]
IC5
74LS244
IORD0\
LD[0..7]
SIG
IC18
74LS244
n.c.
VCC
IORD2\
IC10
74LS174
IOWR1\
IC3C
74HC04
OC\
OC
IC11
74LS374
IOWR3\
F1
1ohm PICO Fuse
J1
DB25SR PCB
VD[0..3]
BD[0..7]
IC6
74LS244
IC9
74LS273
IOWR2\
VS1
VS2
LM317T
VI
VO
GND
VR2
R26
243
VC
C24
100n
C27
10u/25
IC15D
7407
R30
72P R1K
5.3V all
6.2V
R31
200
IC17A
74LS139
IC7A
74LS139
IOWR0\
IOWR1\
IOWR2\
IOWR3\
IC8
74LS174
IC7B
74LS139
V[0..7]
VP
R21
10k
IC15C
7407
R20
4k7
Q9
2N4403
IC2A
74LS32
IORD\
IORQ\
IC2B
74LS32
IOWR\
IC2D
74LS32
IC2C
74LS32
IC15B
7407
R18
4k7
R19
10k0
Q8
2N3906
R22
51k0
CR5
1N4148
R23
1
VP6M
PROSTO
IC3D
74HC04
IC3F
74HC04
IC3E
74HC04
IC17B
74LS139
IC3A
74HC04
CHANOK
IC4
74LS30
IORQ\
R24
7k50
R25
7k50
Q11
2N3904
Q10
2N3904
IC15A
7407
+5V
R2
4k7
R3
4k7
R1
4k7
R4
4k7
R40
1k
R41
1k
SW16
SW DIP-4
IC1
74LS85
V[0..7]
VD[0..3]
Address Select

I/O Ch	SW16				I/O Addr
	4	3	2	1	
0	ON	ON	ON	ON	0280
1	ON	ON	ON	OFF	0284
2	ON	ON	OFF	ON	0288
3	ON	ON	OFF	OFF	028C
4	ON	OFF	ON	ON	0290
5	ON	OFF	ON	OFF	0294
6	ON	OFF	OFF	ON	0298
7	ON	OFF	OFF	OFF	029C
8	OFF	ON	ON	ON	02A0
9	OFF	ON	ON	OFF	02A4
10	OFF	ON	OFF	ON	02A8
11	OFF	ON	OFF	OFF	02AC
12	OFF	OFF	ON	ON	02B0
13	OFF	OFF	ON	OFF	02B4
14	OFF	OFF	OFF	ON	02B8
15	OFF	OFF	OFF	OFF	02BC

V ... Voltage select
VD ... Voltage Drive
SD ... System Data
SA ... System Address
BD ... Buffered Data
LD ... Latched Data

OLEO

Title
EPAL PROGRAMATOR

Size B
Document Number ALTERA.SCH
REV 0

Date: November 9, 1991
Sheet 1 of 3

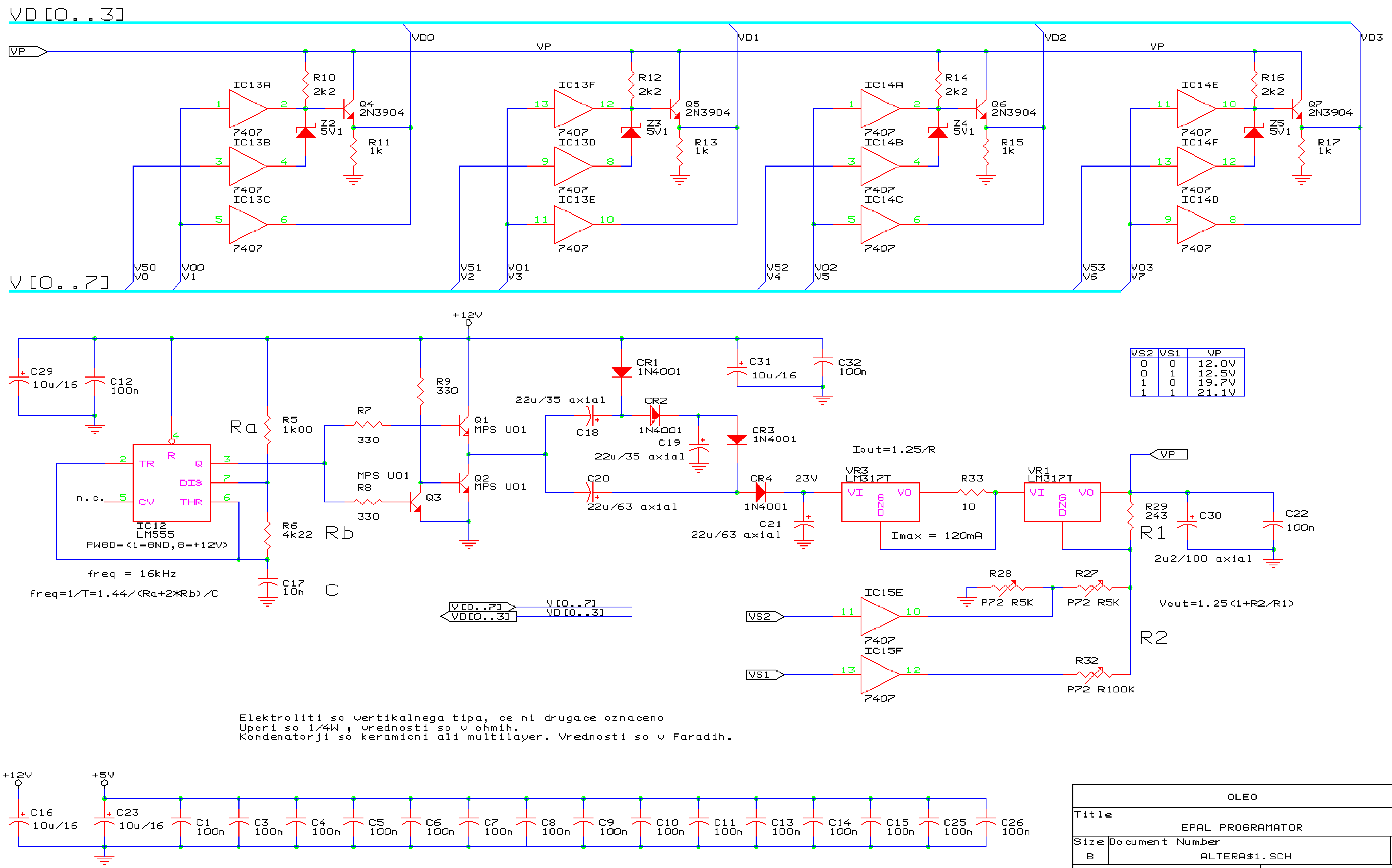
VD[0..3]
VP
VD0
VD1
VD2
VD3
IC13A
IC13B
IC13C
IC13D
IC13E
IC13F
IC14A
IC14B
IC14C
IC14D
IC14E
IC14F
7407
R10 2k2
R11 1k
R12 2k2
R13 1k
R14 2k2
R15 1k
R16 2k2
R17 1k
Q4 2N3904
Q5 2N3904
Q6 2N3904
Q7 2N3904
Z2 5V1
Z3 5V1
Z4 5V1
Z5 5V1
V50 V0
V00 V1
V51 V2
V01 V3
V52 V4
V02 V5
V53 V6
V03 V7
V[0..7]
+12V
C29 10u/16
C12 100n
IC12 LM555
PWGD=(1=GND,8=+12V)
TR
R
Q
DIS
CV
THR
n.c.
Ra
R5 1k00
R6 4k22
Rb
C17 10n
C
freq = 16kHz
freq=1/T=1.44/(Ra+2*Rb)/C
R7 330
R8 330
R9 330
Q1 MPS U01
Q2 MPS U01
MPS U01
Q3
22u/35 axial
C18
CR1 1N4001
CR2 1N4001
C19 22u/35 axial
CR3 1N4001
C20 22u/63 axial
CR4 1N4001
23V
C21 22u/63 axial
C31 10u/16
C32 100n
Iout=1.25/R
VR3 LM317T
VI
GND
VO
R33 10
Imax = 120mA
VR1 LM317T
VP
R29 243
R1
C30 2u2/100 axial
C22 100n
R28 P72 R5K
R27 P72 R5K
Vout=1.25(1+R2/R1)
R2
IC15E
IC15F
VS2
VS1
R32 P72 R100K
V[0..7]
VD[0..3]
+5V
C16 10u/16
C23 10u/16
C1 100n
C3 100n
C4 100n
C5 100n
C6 100n
C7 100n
C8 100n
C9 100n
C10 100n
C11 100n
C13 100n
C14 100n
C15 100n
C25 100n
C26 100n

VS2	VS1	VP
0	0	12.0V
0	1	12.5V
1	0	19.7V
1	1	21.1V

Elektroliti so vertikalnega tipa, ce ni drugace oznaceno
Upori so 1/4W , vrednosti so v ohmih.
Kondenzatorji so keramicni ali multilayer. Vrednosti so v Faradih.

OLEO

Title		
EPAL PROGRAMATOR		
Size	Document Number	REV
B	ALTERA$1.SCH	0
Date: February 26, 1991	Sheet 2 of 3	

R28
R32
R27
R30
C27
VR2
C22
R26
C30
R37
R29
R31
C24
VR1
CR1
Q4
Q5
Z3
R12
R13
R11
R10
Z2
R41
R40
IC13
C13
Q7
Q6
R16
R14
R15
Z5
R17
Z4
IC14
C14
C15
IC15
R23
CR5
R22
R19
R25
R24
R18
R20
R21
Q11
Q10
Q8
Q9
VR3
C18
CR2
C25
IC17
C26
IC18
C4
IC4
C2
IC2
C11
IC11
C19
Q3
Q1
Q2
CR3
C20
CR4
C21
C9
C3
IC3
C10
IC9
C6
IC10
IC6
R4
R3
R2
R1
J1
L1
C16
C23
C29
C32
C31
C12
IC12
C17
SW16
C1
IC1
C8
IC8
C7
IC7
C5
IC5
A31
A1
1986 -No.001
Rev.A
COMPONENT SIDE
SOLDER SIDE

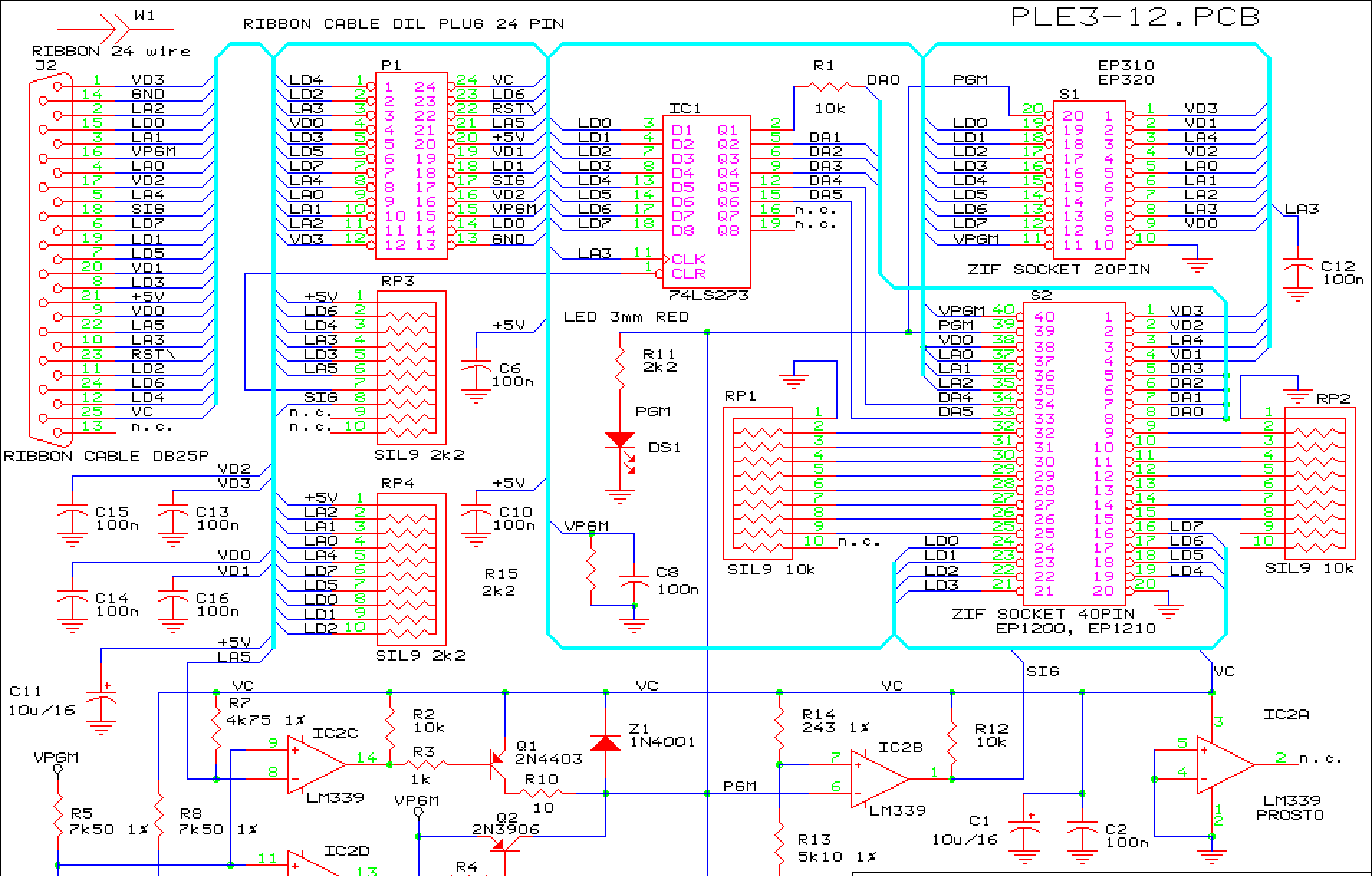
PLE3-12.PCB
W1
RIBBON CABLE DIL PLUG 24 PIN
RIBBON 24 wire
J2
RIBBON CABLE DB25P
VD3
GND
LA2
LD0
LA1
VPGM
LA0
VD2
LA4
SIG
LD7
LD1
LD5
VD1
LD3
+5V
VD0
LA5
LA3
RST\
LD2
LD6
LD4
VC
n.c.
P1
IC1
74LS273
D1 D2 D3 D4 D5 D6 D7 D8
Q1 Q2 Q3 Q4 Q5 Q6 Q7 Q8
CLK
CLR
R1
10k
DA0
DA1
DA2
DA3
DA4
DA5
PGM
EP310
EP320
S1
ZIF SOCKET 20PIN
C12
100n
RP3
SIL9 2k2
RP4
SIL9 2k2
C6
100n
C10
100n
LED 3mm RED
R11
2k2
DS1
VPGM
C8
100n
R15
2k2
RP1
SIL9 10k
S2
ZIF SOCKET 40PIN
EP1200, EP1210
RP2
SIL9 10k
C15
100n
C13
100n
C14
100n
C16
100n
C11
10u/16
VC
R7
4k75 1%
IC2C
LM339
R2
10k
R3
1k
Q1
2N4403
R10
10
Z1
1N4001
R14
243 1%
IC2B
LM339
R12
10k
IC2A
LM339
PROSTO
SIG
R13
5k10 1%
C1
10u/16
C2
100n
R5
7k50 1%
R8
7k50 1%
IC2D
LM339
Q2
2N3906
R4
510 1%
R6
1k00 1%
R9
1k00 1%
C7
10n
R15
2k21 1%
C4
220n
C5
470n
C9
100n

OLEO

Title
EPAL PROGRAMATOR - PLE3-12 Programming unit

Size	Document Number	REV
A	ALTERA$2.SCH	1

Date: April 1, 1991 Sheet 3 of 4

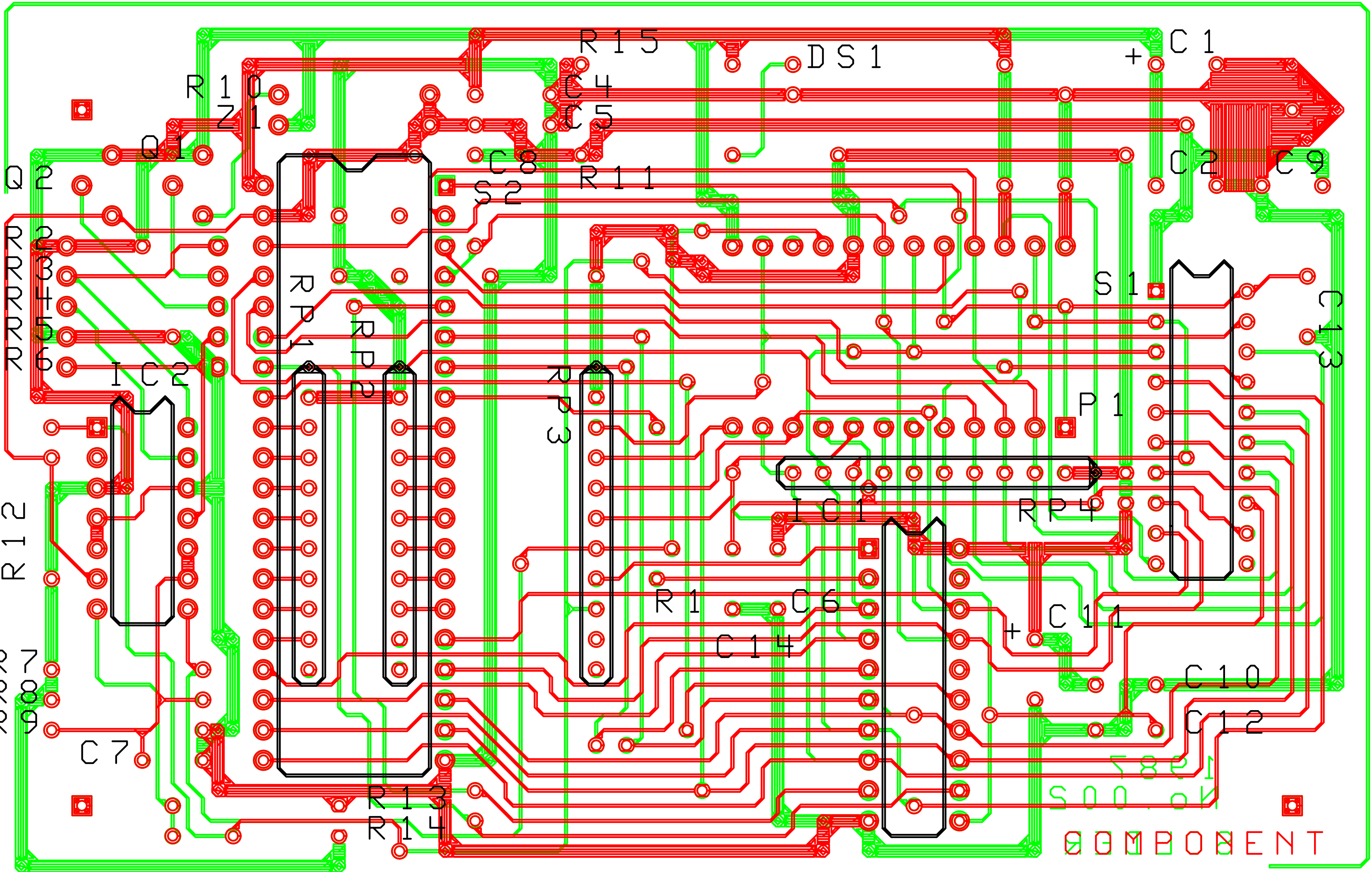
R15
DS1
C1
+
R10
C4
Z1
C5
Q1
C8
Q2
C2
C9
R11
S2
R2
R3
R4
R5
R6
RP1
RP2
S1
C13
IC2
RP3
P1
RP4
IC1
R12
R1
C6
C11
+
C14
C10
R7
R8
R9
C12
C7
R13
R14
COMPONENT

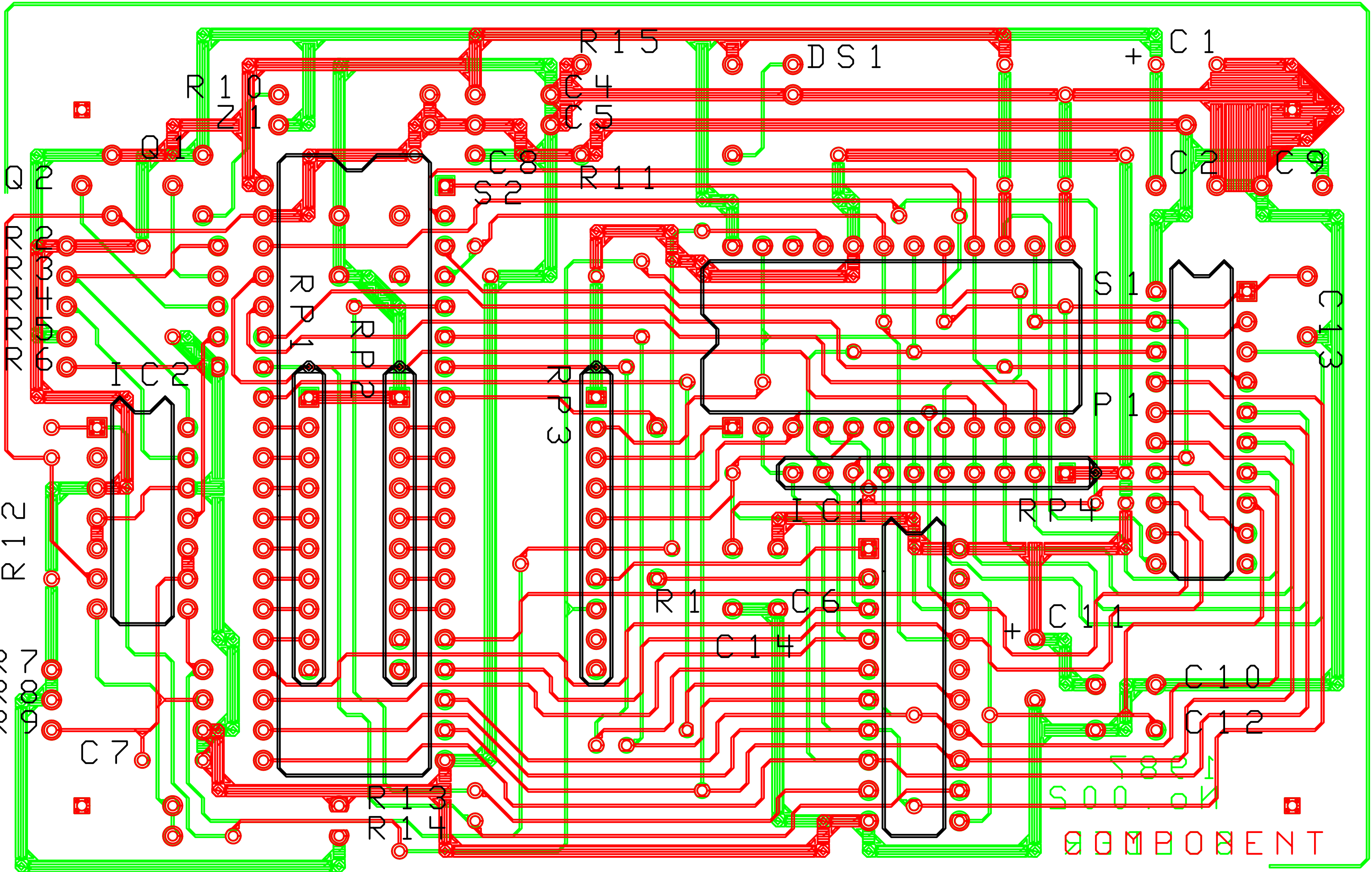
R15
DS1
+
C1
R10
C4
Z1
C5
Q1
C8
Q2
R11
S2
C2
C9
R2
R3
R4
R5
R6
RP1
RP2
IC2
RP3
S1
C13
P1
R12
IC1
RP4
R1
C6
+
C11
C14
C10
R7
R8
R9
C7
C12
R13
R14
COMPONENT

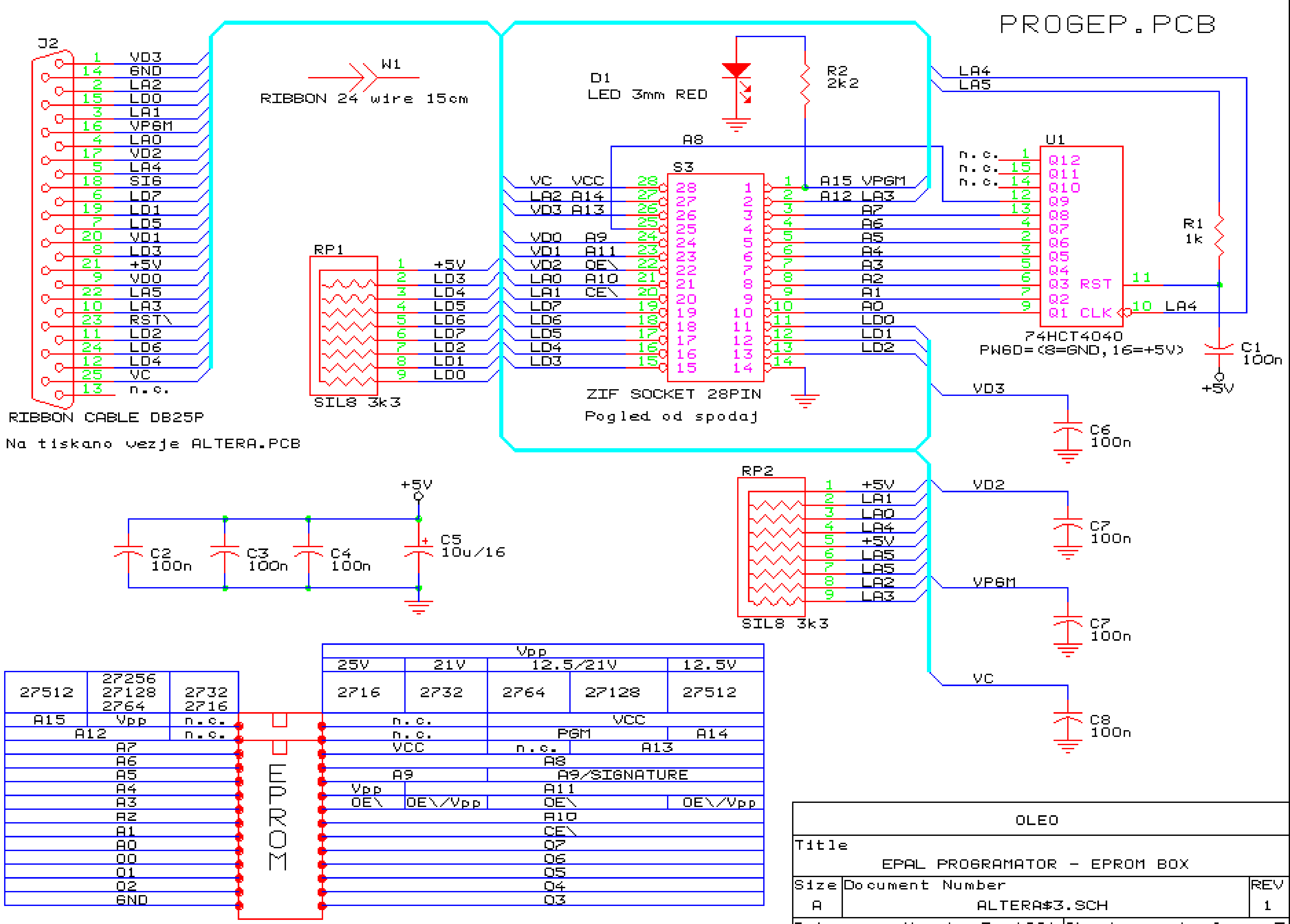
PROGEP.PCB
J2
1 VD3
14 GND
2 LA2
15 LD0
3 LA1
16 VPGM
4 LA0
17 VD2
5 LA4
18 SIG
6 LD7
19 LD1
7 LD5
20 VD1
8 LD3
21 +5V
9 VD0
22 LA5
10 LA3
23 RST\
11 LD2
24 LD6
12 LD4
25 VC
13 n.c.
RIBBON CABLE DB25P
Na tiskano vezje ALTERA.PCB
W1
RIBBON 24 wire 15cm
RP1
1 +5V
2 LD3
3 LD4
4 LD5
5 LD6
6 LD7
7 LD2
8 LD1
9 LD0
SIL8 3k3
D1
LED 3mm RED
R2
2k2
A8
S3
VC VCC 28
LA2 A14 27
VD3 A13 26
25
VD0 A9 24
VD1 A11 23
VD2 OE\ 22
LA0 A10 21
LA1 CE\ 20
LD7 19
LD6 18
LD5 17
LD4 16
LD3 15
1 A15 VPGM
2 A12 LA3
3 A7
4 A6
5 A5
6 A4
7 A3
8 A2
9 A1
10 A0
11 LD0
12 LD1
13 LD2
14
ZIF SOCKET 28PIN
Pogled od spodaj
LA4
LA5
U1
n.c. 1 Q12
n.c. 15 Q11
n.c. 14 Q10
12 Q9
13 Q8
4 Q7
2 Q6
3 Q5
5 Q4
6 Q3
7 Q2
9 Q1
RST 11
CLK 10 LA4
74HCT4040
PWGD=(8=GND,16=+5V)
R1
1k
C1
100n
+5V
VD3
C6
100n
RP2
1 +5V
2 LA1
3 LA0
4 LA4
5 +5V
6 LA5
7 LA5
8 LA2
9 LA3
SIL8 3k3
VD2
C7
100n
VPGM
C7
100n
VC
C8
100n
+5V
C2
100n
C3
100n
C4
100n
C5
10u/16
EPROM

27512	27256 27128 2764	2732 2716
A15	Vpp	n.c.
A12		n.c.
A7		
A6		
A5		
A4		
A3		
A2		
A1		
A0		
O0		
O1		
O2		
GND		

Vpp				
25V	21V	12.5/21V		12.5V
2716	2732	2764	27128	27512
n.c.		VCC		
n.c.		PGM		A14
VCC		n.c.	A13	
A8				
A9		A9/SIGNATURE		
Vpp	A11			
OE\	OE\/Vpp	OE\		OE\/Vpp
A10				
CE\				
O7				
O6				
O5				
O4				
O3				

OLEO		
Title EPAL PROGRAMATOR - EPROM BOX		
Size A	Document Number ALTERA$3.SCH	REV 1
Date: March 7, 1991	Sheet 4 of 5	

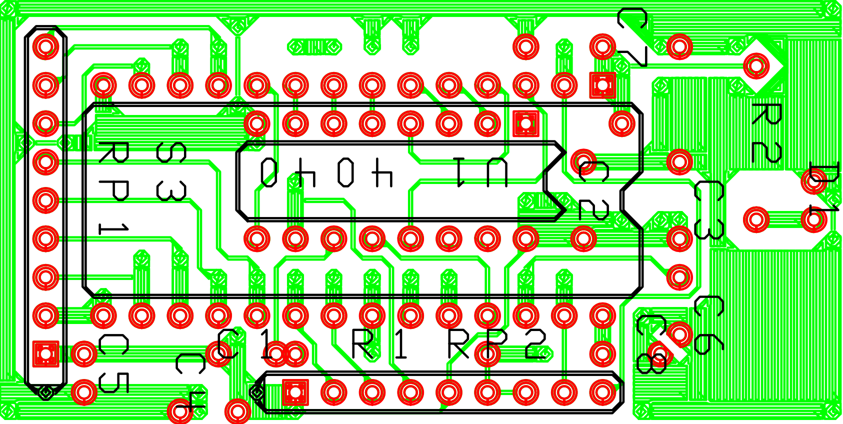
C7
R2
D1
RP1
S3
4040
IC1
C2
C3
C6
C8
C5
C4
C1
R1
RP2

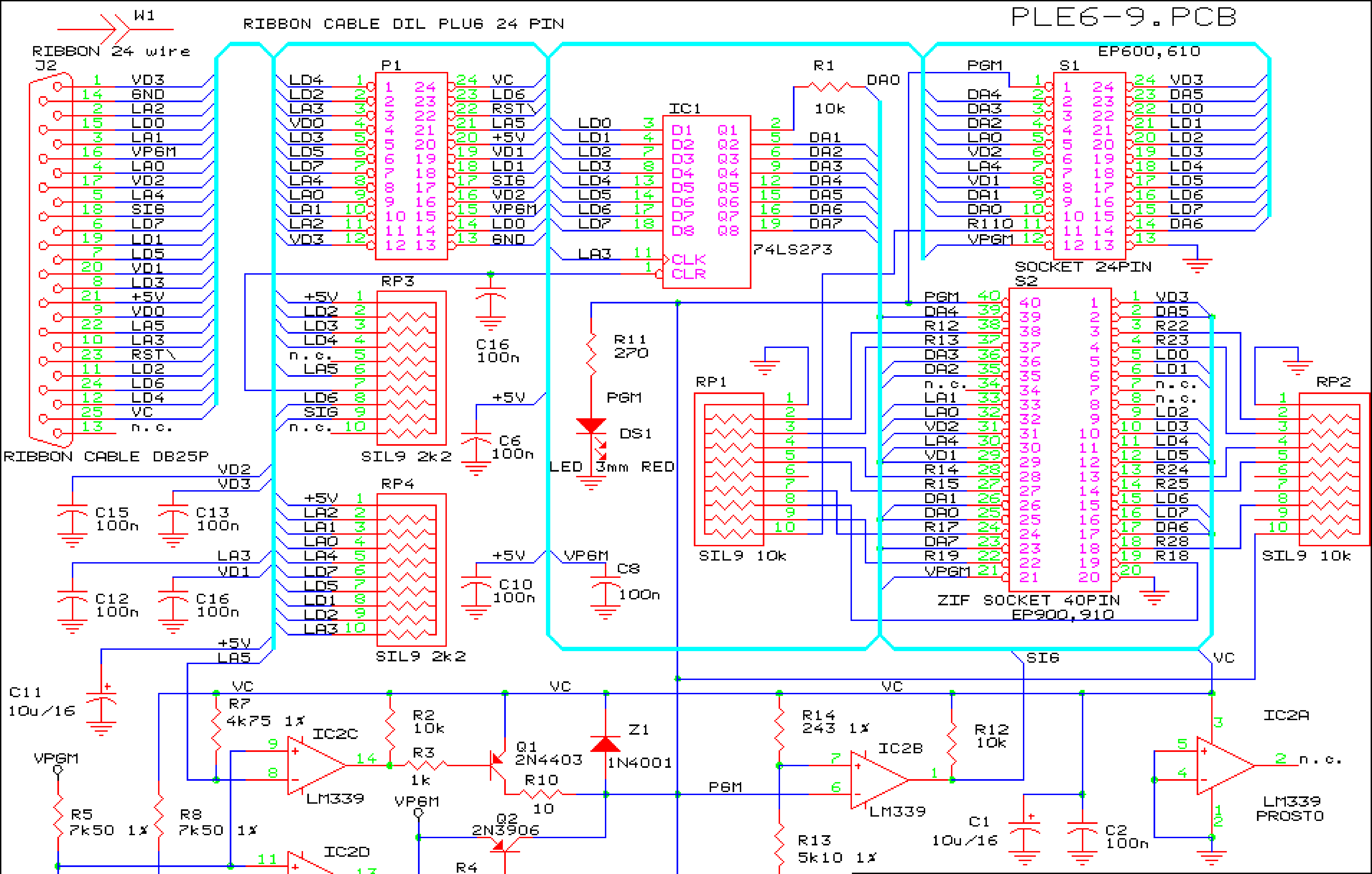
PLE6-9.PCB
W1
RIBBON CABLE DIL PLUG 24 PIN
RIBBON 24 wire
J2
RIBBON CABLE DB25P
P1
IC1
74LS273
R1
10k
DA0
S1
EP600,610
SOCKET 24PIN
S2
ZIF SOCKET 40PIN
EP900,910
RP1
SIL9 10k
RP2
SIL9 10k
RP3
SIL9 2k2
RP4
SIL9 2k2
R11
270
PGM
DS1
LED 3mm RED
C16
100n
C6
100n
C10
100n
C8
100n
C15
100n
C13
100n
C12
100n
C16
100n
C11
10u/16
VC
R7
4k75 1%
IC2C
LM339
R2
10k
R3
1k
Q1
2N4403
R10
10
Z1
1N4001
R14
243 1%
IC2B
LM339
R12
10k
IC2A
LM339
PROSTO
n.c.
SIG
VPGM
R5
7k50 1%
R8
7k50 1%
IC2D
LM339
VPGM
Q2
2N3906
R4
510 1%
R6
1k00 1%
R9
1k00 1%
C7
10n
R15
2k2
C4
220n
C5
470n
C9
100n
R13
5k10 1%
C1
10u/16
C2
100n

OLEO

Title
EPAL PROGRAMATOR - PLE6-9 Programming unit

Size	Document Number	REV
A	ALTERA$4.SCH	0

Date: March 20, 1991 Sheet 5 of 5

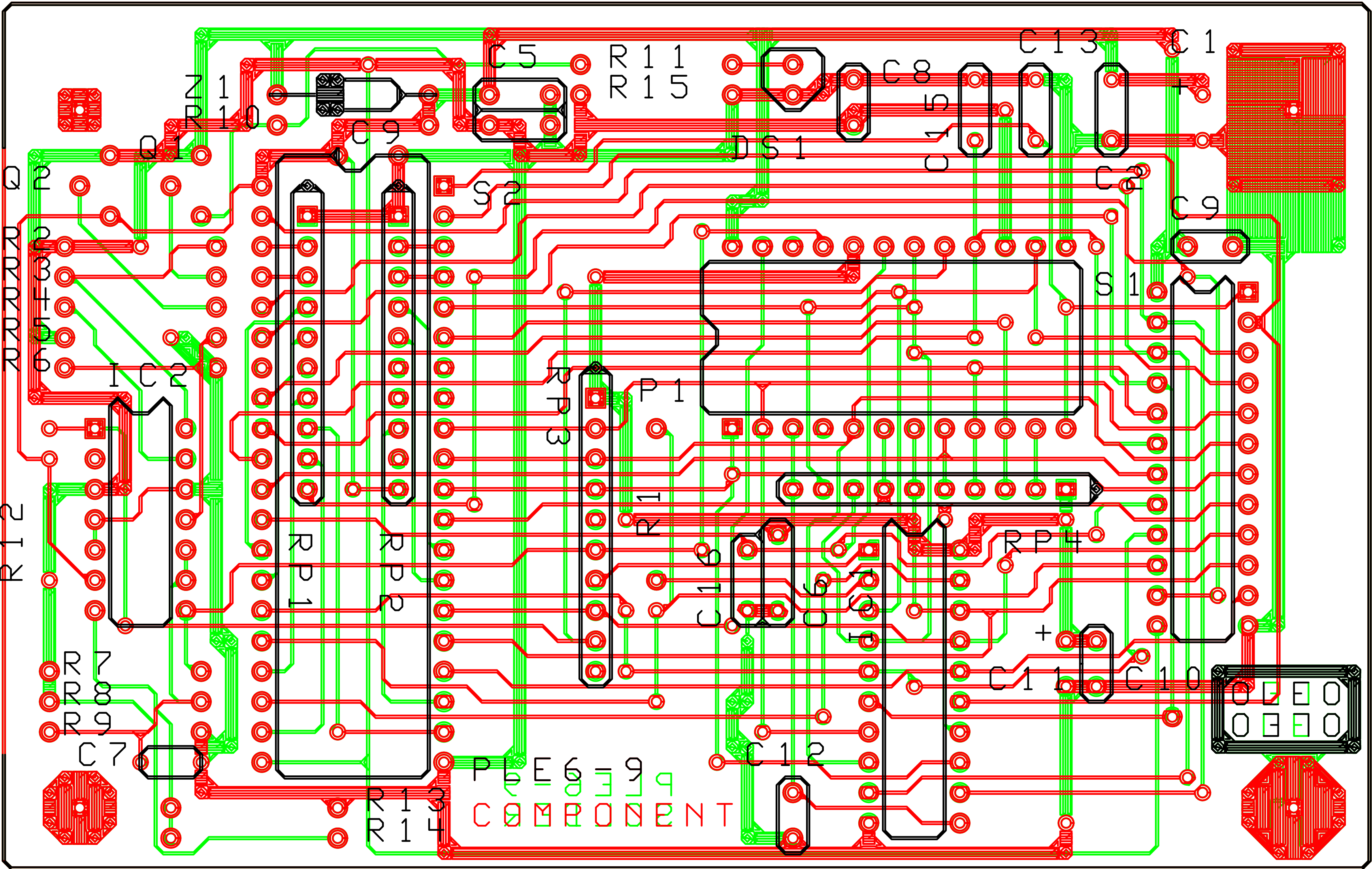
C5
R11
R15
C13
C1
C8
Z1
R10
C9
Q1
Q2
DS1
C15
+
C2
S2
C9
R2
R3
R4
R5
R6
IC2
S1
RP3
P1
R12
RP1
RP2
R1
C16
C6
IC1
RP4
+
C11
C10
R7
R8
R9
C7
C12
PLE6=9
R13
R14
COMPONENT